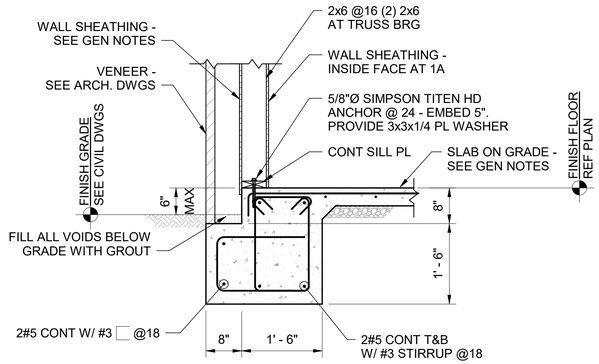

1A/1 Section
S300 3/4" = 1'-0"

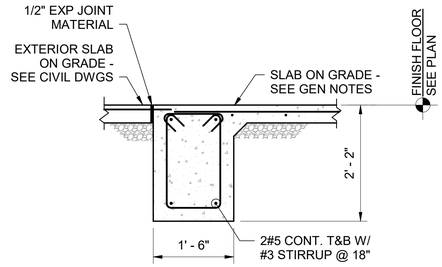

2 Section
S300 3/4" = 1'-0"

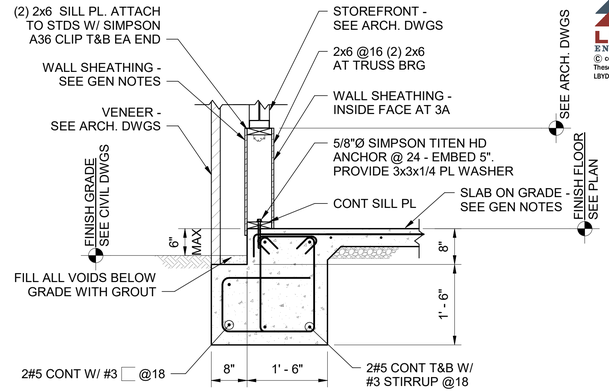

3A/3 Section
S300 3/4" = 1'-0"

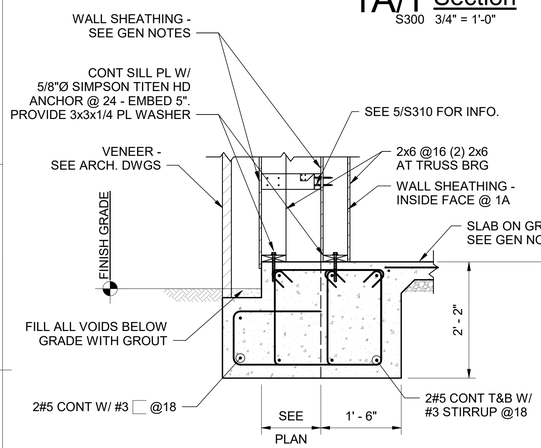

4 Section
S300 3/4" = 1'-0"

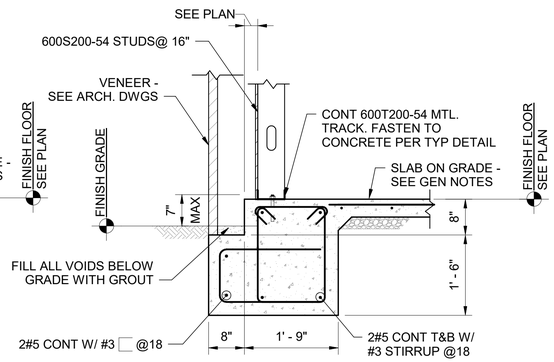

5 Section
S300 3/4" = 1'-0"

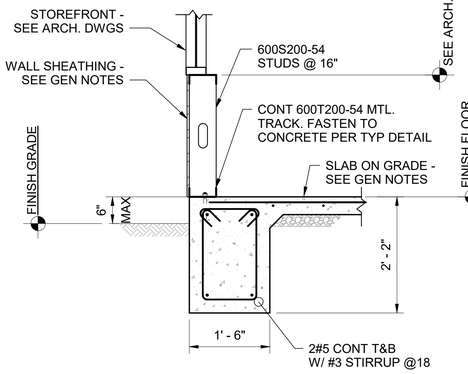

6 Section
S300 3/4" = 1'-0"

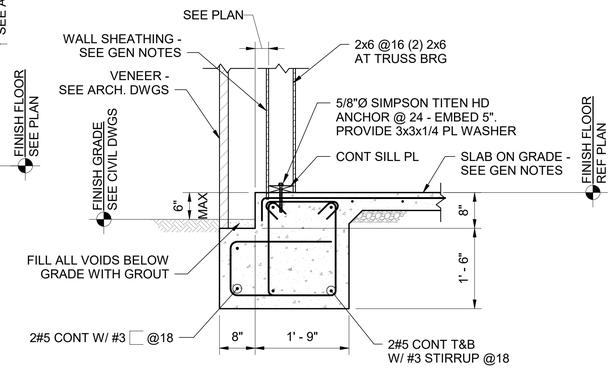

7 Section
S300 3/4" = 1'-0"

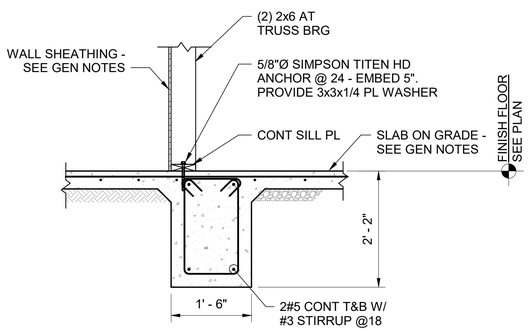

8 Section
S300 3/4" = 1'-0"

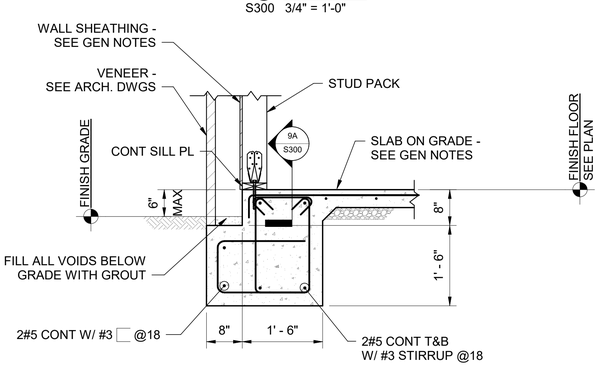

9 Section
S300 3/4" = 1'-0"

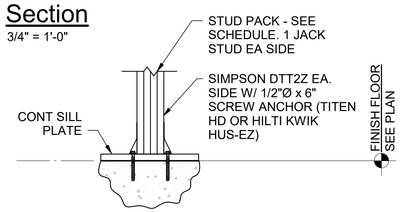

9A Section
S300 3/4" = 1'-0"

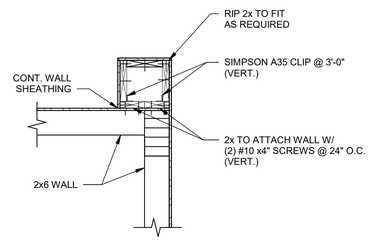

10 Detail
S300 3/4" = 1'-0"

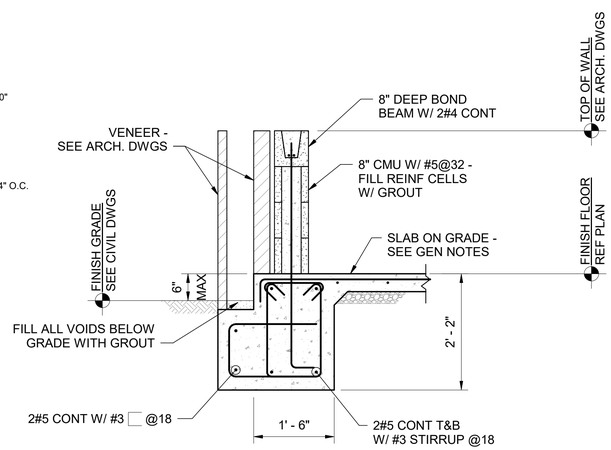

11 Section
S300 3/4" = 1'-0"

LBYD, Inc.
Civil and Structural Engineers
880 Montclair Road
Suite 600
Birmingham, AL 35213
Phone (205) 251-4500
Project No. 131410.008

© copyright 2021
These drawings and design intent are the sole property of LBYD, Inc. which may not be reproduced without written permission

PANDA EXPRESS CHINESE KITCHEN

PANDA EXPRESS, INC.
1683 Walnut Grove Ave.
Rosemead, California
91770
Telephone: 626.799.9898
Facsimile: 626.372.8288

All ideas, designs, arrangement and plans indicated or represented by this drawing are the property of Panda Express Inc. and were created for use on this specific project. None of these ideas, designs, arrangements or plans may be used by or disclosed to any person, firm, or corporation without the written permission of Panda Express Inc.

REVISIONS:

ISSUE DATE:

PANDA HOME SQ_2600_R1	08-05-22
PANDA HOME SQ_2600_R2	01-06-23

PANDA PROJECT #: -
PANDA STORE #: -
ARCH PROJECT #: -

ARCHITECT LOGO

bdg architects

6005 N. Airline Dr.
Suite 600
Houston, TX
77021
P: 713-312-0033
Fx:
Licensed in TX
www.bdgarc.com

PANDA EXPRESS

PANDA HOME SQUARE 2600
Monroe Pavillion, Highway 78
Monroe, GA 30655

S300

FOUNDATION SECTIONS

PANDA HOME SQUARE 2600 R2

PRINTED 8/6/2020
THESE DRAWINGS AND SPECIFICATIONS, AND ANY REPRODUCTION THEREOF, AND ANY CAD OR ELECTRONIC FILE OF THESE DRAWINGS AND PLANS, REMAIN THE COMPANY, AND THE SOLE AND EXCLUSIVE PROPRIETARY PROPERTY OF BDG ARCHITECTS, AND MAY NOT BE REPRODUCED, PUBLISHED, ADAPTED OR USED IN ANY WAY WITHOUT THE EXPRESS WRITTEN PERMISSION OF BDG ARCHITECTS. USE OF THESE PLANS FOR CONSTRUCTION SHALL BE CONSIDERED ACCEPTANCE OF THE TERMS CONTAINED HEREIN AND THE SUITABILITY AND CONTRACTABILITY OF THE PLANS. THE PLANS SHALL NOT BE SCALED OR MODIFIED FOR ANY PURPOSE WITHOUT THE EXPRESS WRITTEN APPROVAL OF BDG ARCHITECTS. ANY CHANGES TO THESE PLANS, REGARDLESS OF HOW WHICH, WITHOUT THE EXPRESS WRITTEN APPROVAL OF BDG ARCHITECTS, ANY CONSTRUCTION EXECUTED FROM THESE PLANS WITHOUT THE EXPRESS WRITTEN APPROVAL OF BDG ARCHITECTS, OR ANY CHANGE IN THE SCOPE, DESIGN, OR INTENT OF THESE PLANS FOR ANY REASON, BY ANY PERSON OTHER THAN BDG ARCHITECTS SHALL AUTOMATICALLY VOID ANY DESIGN RELATED OBLIGATIONS BDG ARCHITECTS MAY HAVE ON THE PROJECT, AND RESULT IN THE FULL AND COMPLETE RELEASE OF BDG ARCHITECTS FROM ANY LIABILITY, CLAIMS, OR DAMAGES INCLUDING ERRORS AND OMISSIONS ARISING OUT OF OR RELATED TO THE PLANS. ANY DISCREPANCIES OR CONFLICTS IN THE PLANS SHALL BE REFERRED IMMEDIATELY TO BDG ARCHITECTS FOR CLARIFICATION PRIOR TO CONTINUING WITH THE WORK. FAILURE TO REFER DISCREPANCIES OR CONFLICTS TO BDG ARCHITECTS PRIOR TO PERFORMING WORK SHALL RESULT IN THE WAIVER OF ANY CLAIMS OR DAMAGES ASSOCIATED WITH THE DISCREPANCIES OR CONFLICTS. THE CONTRACTOR IS RESPONSIBLE FOR THE COORDINATION, SCHEDULING AND COMPLIANCE OF EVERYONE WHO WILL WORK FROM THESE DRAWINGS AND SPECIFICATIONS.