BK 58 PG 91

CORNER RECORD

Document Number CR 6121

City of BERKELEY County of ALAMEDA, California

Brief Legal Description BRASS PIN CITY MONUMENT LOCATED WITHIN GRIZZLY PEAK BLVD. AND IN FRONT OF 1016 GRIZZLY PEAK (CITY OF BERKELEY: B1115)

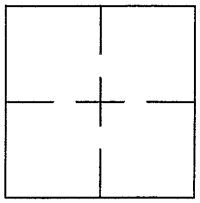

CORNER RECORD

Government Corner ☐ Control ☒
Meander ☐ Property ☐
Rancho ☐ Other ☐
Date of Survey 2/18/14

COORDINATES *(Optional)*

N.
E.
Zone Datum
Elev.

Corner — Left as found ☒ Found and tagged ☐ Established ☐ Reestablished ☐ Rebuilt ☐

Identification and type of corner found: Evidence used to identify or procedure used to establish of reestablish the corner:
BRASS PIN CITY MONUMENT LOCATED WITHIN GRIZZLY PEAK BLVD. AND IN FRONT OF 1016 GRIZZLY PEAK (CITY OF BERKELEY: B1115)

THIS POINT WAS REFERENCED PRIOR TO A CONSTRUCTION PROJECT IN THE VICINITY.

A description of the physical condition of the monument as found and as set or reset:
FOUND AND SET POINTS AS SHOWN ON PAGE 2.
THESE TIES ARE FOR THE PURPOSE OF PERPETUATING THE FOUND MONUMENTATION.
NO CLAIM IS MADE AS TO THE RELATIONSHIP OF THE POINTS OR LINES SHOWN HEREON TO TRUE BOUNDARY LOCATIONS.

SURVEYOR'S STATEMENT

This Corner Record was prepared by me or under my direction in conformance with the Land Surveyors' Act on MAY 6, 2014.

Signed L.S. Number LS 4520
VINCENT H. CUNHA

LICENSED LAND SURVEYOR
VINCENT H. CUNHA
No. 4520
Exp. 09/30/2014
STATE OF CALIFORNIA

COUNTY SURVEYOR'S STATEMENT

This Corner Record was received 4-7-2014 and examined and filed 5-16-2014

Signed Title County Surveyor

PROFESSIONAL LAND SURVEYOR
RUSSELL R. PENLAND, JR.
EXP. 12-31-15
PLS 5726
STATE OF CALIFORNIA

County Surveyor's Comment

212037-M\CR-11

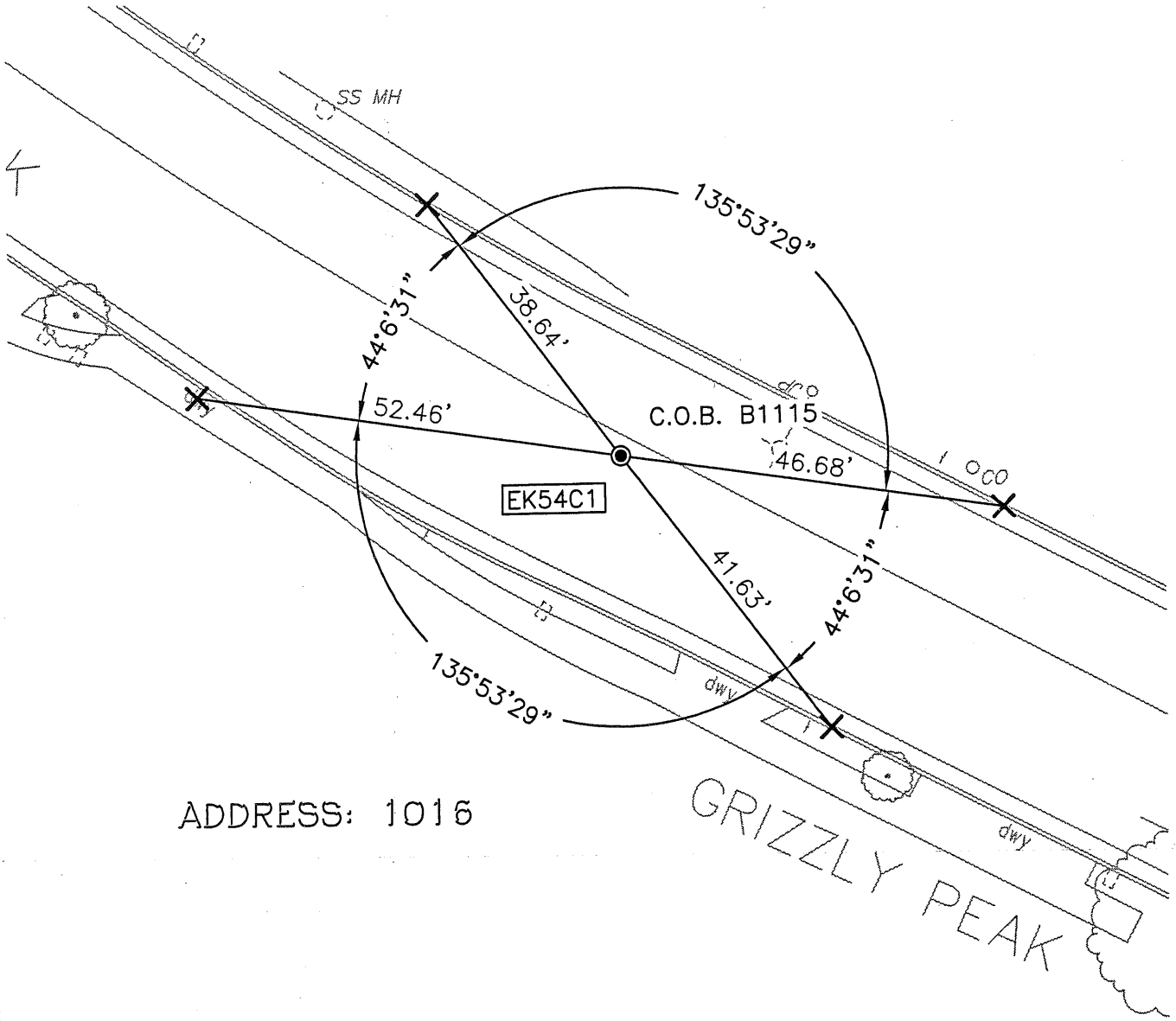

SCALE : 1"=20'

LEGEND

- ◉ FOUND BRASS PIN IN MONUMENT WELL
- X SET CUT CROSS IN CONCRETE
- AA##A# ALAMEDA COUNTY MONUMENT ID
- C.O.B. CITY OF BERKELEY

212037-M\CR-11